B054 sibley054bcn2008

37.8602 -122.1995 405.6 m

15 ft Basaltic andesite

80 ft - Basaltic andesite, brownish in color.

104 ft - Clayish layer.

160 ft - Rhyolite with intermittent clayish layers.

180 ft - Basaltic andesite, with some rhyolite.

190 ft - Vesicular Basalt, possibly somewhat fractured.

205 ft - Fractured zone, making ~40gal/min.

260 ft - Basaltic andesite that is fractured quite a bit, making 150+gal/min.

310 ft - Hit shale, somewhat competent.

400 ft - Shale, small fragments.

410 ft - 87.6˚

420 ft - Shale, making ~20gal/min.

430 ft - Clay silt/shale.

460 ft - Alternating basalt and shale.

500 ft - Last 10 ft softer rock, drilled through fairly quickly.

518 ft - Clay mixed with shale/volcanics. Color of lithology changes to tannish/brown.

530 ft - Mostly clay.

533 ft - Mineral rich volcanics.

543 ft - Fracture zone.
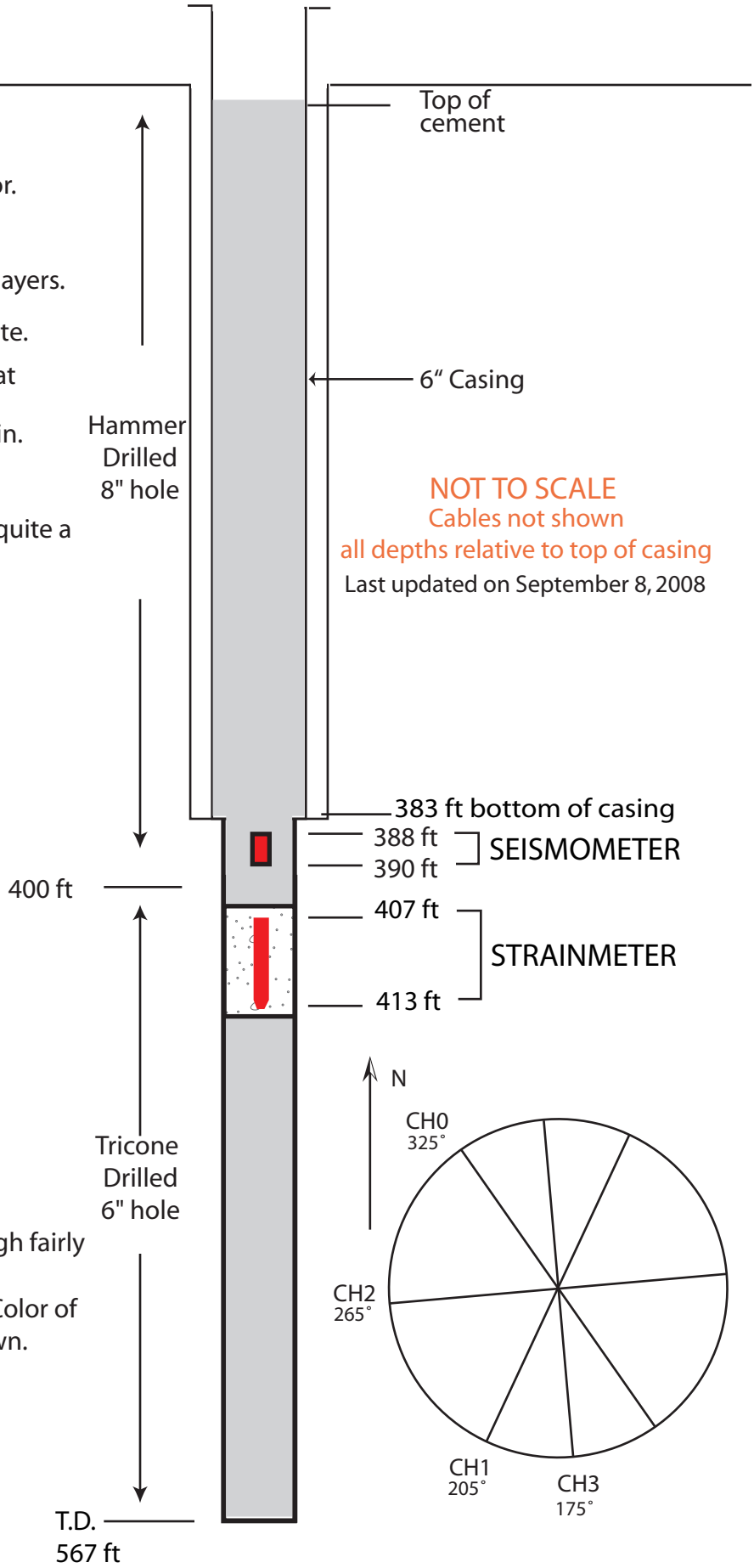
563 ft - Hit clayish layer.